BF630T4E230

FOUR-POLE CONTACTOR, IEC OPERATING CURRENT ITH (AC1) = 800A, AC/DC COIL, 100...250VAC/DC



Product designation			Power contactor
Product type designation			BF630
Contact characteristics			
Number of poles		Nr.	4
Rated insulation voltage Ui IEC/EN		V	1000
Rated impulse withstand voltage Uimp		kV	8
Operational frequency			
	min	Hz	25
	max	Hz	400
IEC Conventional free air thermal current Ith ≤ 40°C		A	800
Operational current Ie			
	AC-1 (≤40°C)	A	800
	AC-1 (≤55°C)	A	660
	AC-1 (≤70°C)	A	570
	AC-3 (≤440V ≤55°C)	A	630
	AC-4 (400V)	A	260
Rated operational power AC-3 (T≤55°C)			
	230V	kW	200
	400V	kW	355
	415V	kW	355
	440V	kW	400
	500V	kW	400
	690V	kW	500
	1000V	kW	250
Rated operational current AC-3 (T≤55°C)			
	230V	A	630
	400V	A	630
	415V	A	630
	440V	A	630
	500V	A	552
	690V	A	493
	1000V	A	250
Rated operational power AC-1 (T≤40°C)			
	230V	kW	303
	400V	kW	527
	500V	kW	579
	690V	kW	908
IEC max current Ie in DC1 with L/R ≤ 1ms with 1 poles in series			
	75V	A	800
	110V	A	460
IEC max current Ie in DC1 with L/R ≤ 1ms with 2 poles in series			
	75V	A	800
	110V	A	800
	220V	A	700
IEC max current Ie in DC1 with L/R ≤ 1ms with 3 poles in series			

The characteristics described in this document are subject to updates or modifications at any time. The descriptions, technical and functional information, illustrations and instructions in this brochure are purely illustrative, and are consequently not contractually binding

	75V	A	800
	110V	A	800
	220V	A	800
	330V	A	700
IEC max current Ie in DC1 with L/R ≤ 1ms with 4 poles in series			
	75V	A	800
	110V	A	800
	220V	A	800
IEC max current Ie in DC3-DC5 with L/R ≤ 15ms with 1 poles in series			
	75V	A	800
	110V	A	460
IEC max current Ie in DC3-DC5 with L/R ≤ 15ms with 2 poles in series			
	75V	A	800
	110V	A	800
	220V	A	700
IEC max current Ie in DC3-DC5 with L/R ≤ 15ms with 3 poles in series			
	75V	A	800
	110V	A	800
	220V	A	800
	330V	A	650
IEC max current Ie in DC3-DC5 with L/R ≤ 15ms with 4 poles in series			
	75V	A	800
	110V	A	800
	220V	A	800
	330V	A	700
	460V	A	700
Short-time allowable current for 10s (IEC/EN60947-1)		A	5040
Protection fuse			
	gG (IEC)	A	1000
	aM (IEC)	A	630
Making capacity (RMS value)		A	6300
Breaking capacity at voltage			
	440V	A	6300
	500V	A	4416
	690V	A	3944
Resistance per pole (average value)		mΩ	0.09
Power dissipation per pole (average value)			
	Ith	W	64
	AC-3	W	40
Tightening torque for terminals			
	min	Nm	55
	max	Nm	55
	min	lbin	486
	max	lbin	486
Tightening torque for coil terminal			
	min	Nm	0.8
	max	Nm	1
	min	lbin	7.1
	max	lbin	8.8
Power terminal protection according to IEC/EN 60529			IP00

Mechanical features

Operating position		
	normal	Vertical plan

The characteristics described in this document are subject to updates or modifications at any time. The descriptions, technical and functional information, illustrations and instructions in this brochure are purely illustrative, and are consequently not contractually binding

		allowable		±30°
Fixing				Screw
Operations				
Mechanical life			cycles	5000000
Electrical life			cycles	600000 (Ie AC-3 400V)
Safety related data				
Performance level B10d according to EN/ISO 13489-1				
		rated load	cycles	600000
		mechanical load	cycles	5000000
EMC compatibility				yes
AC coil operating				
Rated AC voltage at 50/60Hz, 60Hz				
		min	V	100
		max	V	250
AC operating voltage				
	of 50/60Hz coil powered at 50Hz			
	pick-up			
		min	%Us	80 Us min
		max	%Us	110 Us max
	drop-out			
		max	%Us	≤75 Us min
	of 50/60Hz coil powered at 60Hz			
	pick-up			
		min	%Us	80 Us min
		max	%Us	110 Us max
	drop-out			
		max	%Us	≤75 Us min
AC average coil consumption at 20°C				
	of 50/60Hz coil powered at 50Hz			
		in-rush	VA	390
		holding	VA	12
	of 50/60Hz coil powered at 60Hz			
		in-rush	VA	390
		holding	VA	12
Dissipation at holding ≤20°C 50Hz			W	4
DC coil operating				
DC rated control voltage				
		min	V	100
		max	V	250
DC operating voltage				
	pick-up			
		min	%Us	85 Us min
		max	%Us	110 Us max
	drop-out			
		max	%Us	≤70 Us min
Average coil consumption ≤20°C				
		in-rush	W	390
		holding	W	4
Max cycles frequency				
Mechanical operation			cycles/h	1000
Operating times				
Average time for Us control				

The characteristics described in this document are subject to updates or modifications at any time. The descriptions, technical and functional information, illustrations and instructions in this brochure are purely illustrative, and are consequently not contractually binding

	in AC				
		Closing NO			
			min	ms	95
			max	ms	135
		Opening NO			
			min	ms	40
			max	ms	53
UL technical data					
Rated operational voltage AC (UL)				V	600
Yielded mechanical performance					
	for three-phase AC motor				
			200/208V	HP	200
			220/240V	HP	250
			460/480V	HP	500
			575/600V	HP	600
General USE					
	Contactor				
			AC current	A	800
Short-circuit protection fuse, 600V					
	High fault				
			Short circuit current	kA	100
			Fuse rating	A	800
			Fuse class		L
	Standard fault				
			Short circuit current	kA	30
			Fuse rating	A	1000
			Fuse class		L
Ambient conditions					
Temperature					
	Operating temperature				
			min	°C	-40
			max	°C	70
	Storage temperature				
			min	°C	-50
			max	°C	80
Max altitude				m	3000
Resistance & Protection					
Pollution degree					3
Dimensions					

The characteristics described in this document are subject to updates or modifications at any time. The descriptions, technical and functional information, illustrations and instructions in this brochure are purely illustrative, and are consequently not contractually binding

BF630T4E230

FOUR-POLE CONTACTOR, IEC OPERATING CURRENT ITH (AC1) = 800A, AC/DC COIL, 100...250VAC/DC

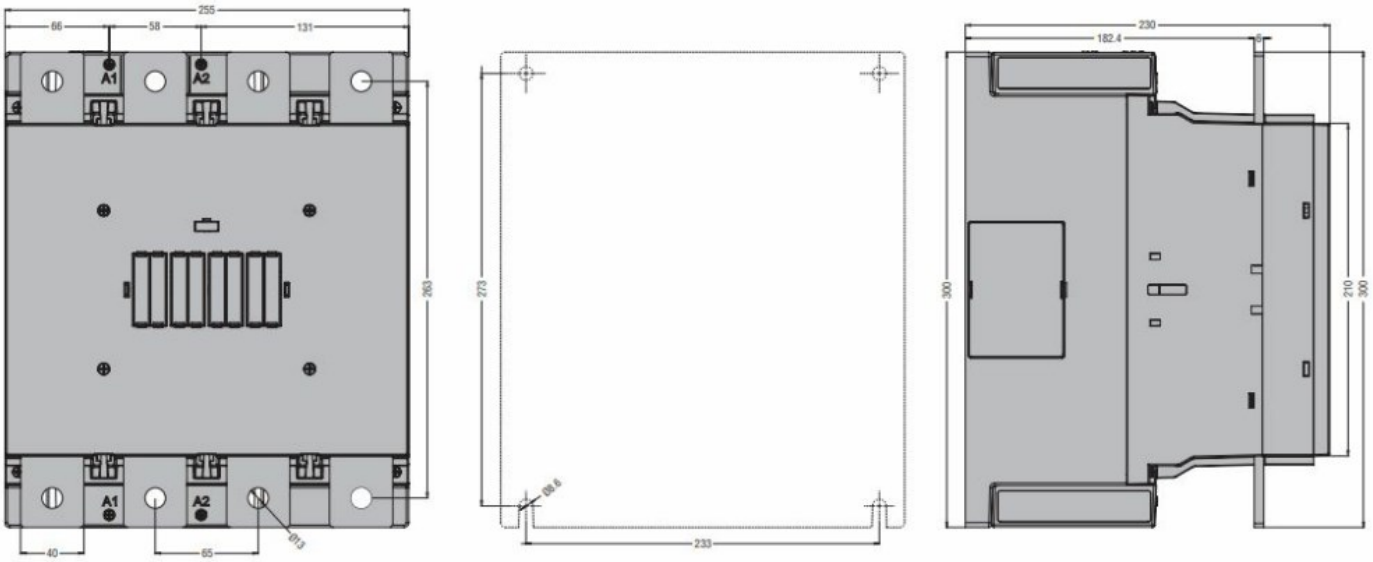

Wiring diagrams

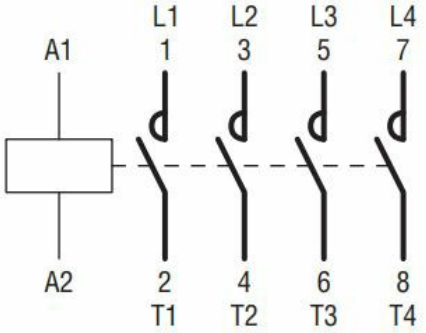

Certifications and compliance

Compliance

	CSA C22.2 n° 60947-1
	CSA C22.2 n° 60947-4-1
	IEC/EN/BS 60947-1
	IEC/EN/BS 60947-4-1
	UL 60947-1
	UL 60947-4-1

Certificates

cULus

ETIM classification

ETIM 8.0	EC000066 - Power contactor, AC switching

The characteristics described in this document are subject to updates or modifications at any time. The descriptions, technical and functional information, illustrations and instructions in this brochure are purely illustrative, and are consequently not contractually binding